Spare Parts

Foam injektor lance ST-73.1

Item-No. 200073900

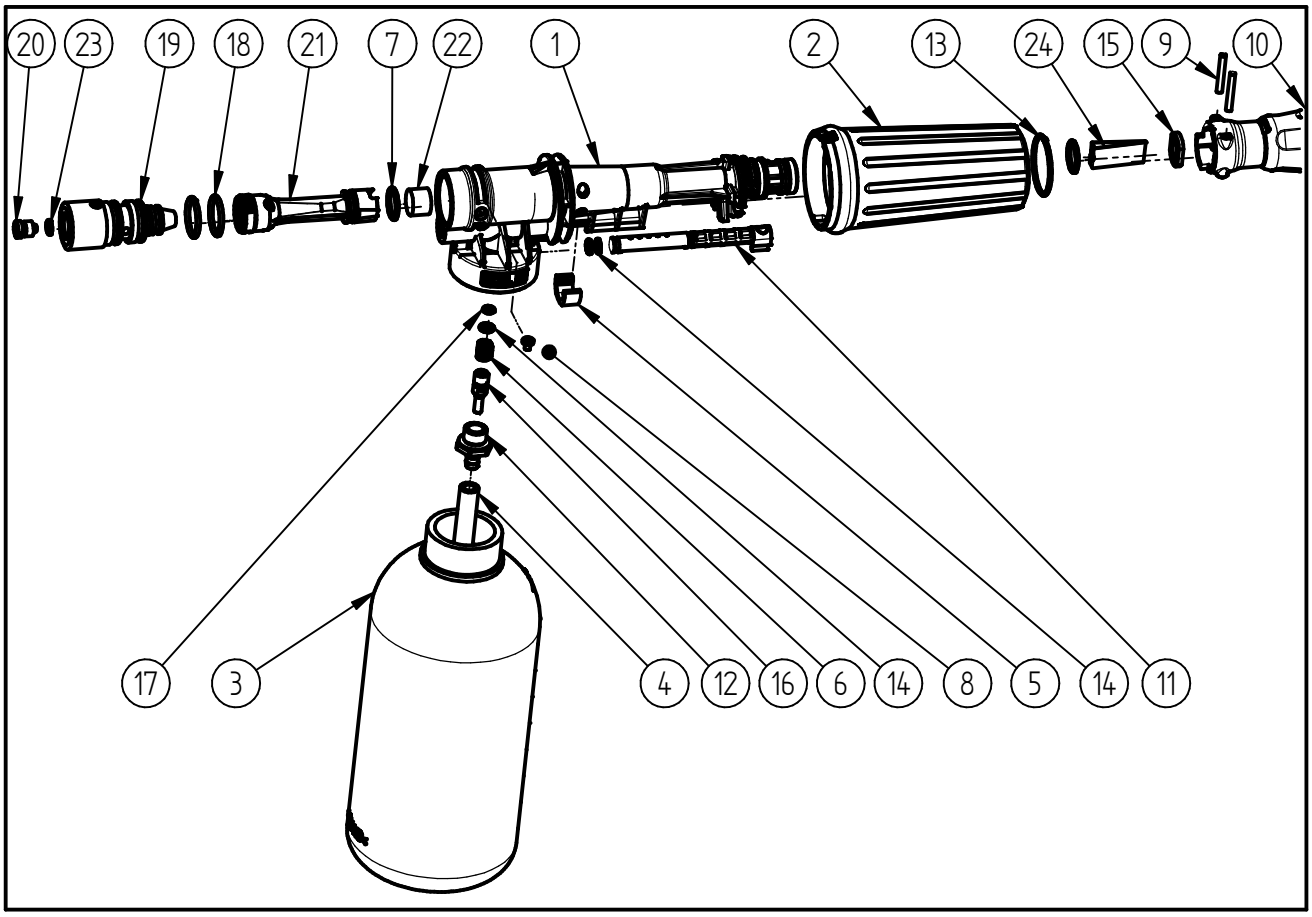

Pos.	Item-No.	Description
1	020073600	Handle ST-73.1 drilled
2	020073603	Handgrip ST-73.1
3	020073513	Chemical tank 1l
4	020073514	Plastic hose 6x2 / 195 mm
5	020073521	Limit clip ST-73.1
6	060073511	Spring ST-73
7	050000911	O-ring 14x1,78 EPDM 70Shore
8*	040004188	Pan- head screw
9	040073517	Cylinder pin DIN 7 3x24 h8 stainless
10	020073611	Nozzle middle spot ST-73.1
11	020073607	Chemical rail ST-73.1
12	020073620	Nipple ST-73.1 red
13	060073621	Snap ring ST-73
14	050000521	O-ring 5x1,5 FKM75-ETP extreme
15	020073512	Spacer ST-73.1
16	020073508	Ceiling Pin ST-73.1
17	050000264	O-ring 2,9x1,78 FKM ETP-75 extre

Pos.	Item-No.	Description
18	050000660	O-ring 18x2 EPDM 70Shore
19	040073505	Injector Housing
20	040073512	Nozzle ST-73 1,50mm
21	020073604	Airpipe long
22	040073503	Foampad ST-73
23	050000785	O-ring 5x1,5 EPDM 70 Shore blue
24	060073515	Leaf spring ST-73

Repair-Kits

Pos.	Item-No.	Description
*		

Pos.	Item-No.	Description